THE SHILOH™ HIGH-EFFICIENCY WOODSTOVE

EPA Certified (4.22 grams/hr)

Model TR002B Owners Manual

(Save These Instructions)

Le manuel de langue français est disponible à www.vogelzang.com

French language manual is available at www.vogelzang.com

Tested & Listed By O-T L Portland Oregon USA
C US
OMNI-Test Laboratories, Inc.
Report No. 235-S-01c-2

READ ALL INSTRUCTIONS CAREFULLY BEFORE INSTALLING OR OPERATING THIS STOVE. FAILURE TO FOLLOW INSTRUCTIONS MAY RESULT IN PROPERTY DAMAGE, BODILY INJURY, OR EVEN DEATH.

This stove meets test standards:
US: UL 1482-2010 & CDN: ULC-S627-00

NOTE: IT IS RECOMMENDED INSTALLATION BE COMPLETED BY A QUALIFIED HEATING EQUIPMENT INSTALLER!

REFER TO MARKINGS ON STOVE LABELS FOR ADDITIONAL INFORMATION.

DO NOT INSTALL IN A MOBILE HOME.

SAFETY NOTICE: IF THIS STOVE IS NOT PROPERLY INSTALLED, A HOUSE/BUILDING FIRE MAY RESULT. FOR YOUR SAFETY, CONTACT LOCAL OR MUNICIPAL BUILDING OR FIRE OFFICIALS ABOUT PERMITS, RESTRICTIONS, AND INSTALLATION REQUIREMENTS FOR YOUR AREA.

VOGELZANG *International* CORPORATION

Vogelzang International Corporation
400 West 17th Street
Holland, Michigan 49423
www.vogelzang.com
Phone: 1-616-396-1911
Fax: 1-616-396-1971

SAFETY INSTRUCTIONS-Read All Instructions Carefully.

1. The installation of this stove must comply with your local building code rulings. Please observe the clearances to combustibles (see reference figures 10–12). Do not place fuel, furniture or any other objects within the clearance area.
2. Verify that the stove is properly assembled and installed before firing the stove for the first time. After reading these instructions, if you have any doubt about your ability to complete your installation properly, you must obtain the services of a professional licensed installer familiar with all aspects of safe and correct installation. DO NOT use temporary or makeshift compromises during installation. There must be **NO DEVIATION OR ALTERATION OF ANY KIND** from the very specific instructions spelled out in this instruction manual as it pertains to the installation of this woodstove. **NO EXCEPTIONS!**
3. DO NOT store wood, kindling, flammable liquids or other combustible materials in the vicinity of the appliance. Refer to certification label on back of unit and reference figures 10–12 in this manual.
4. **DO NOT INSTALL THIS STOVE IN A MOBILE HOME, MANUFACTURED HOME, TRAILER OR TENT NO EXCEPTIONS! (HUD Federal Standard: 24 CFR Ch.XX).**
5. **DO NOT ELEVATE THIS STOVE BY ANY MEANS.** (i.e. bricks under pedestal base, cement blocks) Stove base must set directly upon the solid-surface, non-combustible floor as specified in this stove instruction manual.
6. **DO NOT MODIFY THIS STOVE IN ANY WAY!** Stove must be installed with pedestal stand provided and attached as shown in the instructions. **DO NOT OPERATE WITHOUT ASH DRAWER OR ASH CLEAN OUT COVER IN PLACE** – ***NO EXCEPTIONS***. Assemble only with original parts as supplied and shown in this manual. **DO NOT OPERATE A STOVE THAT IS MISSING ANY PARTS!** If any parts are missing or defective, please notify the dealer or manufacturer immediately. Replace missing, broken or worn parts with factory original or equivalent parts only.
7. **CAUTION: DO NOT ALTER COMBUSTION AIR CONTROL RANGE TO INCREASE FIRING OR FOR ANY REASON.** Altering or tampering with air control beyond normal capacity will create unsafe and hazardous conditions.
8. Always connect this stove to a chimney and vent to the outside. Never vent to a room or inside a building. **DO NOT CONNECT THIS UNIT TO A CHIMNEY FLUE SERVING ANOTHER APPLIANCE.**
9. **DO NOT CONNECT A WOOD BURNING STOVE TO AN ALUMINUM TYPE B GAS VENT.** This is not safe. Use approved masonry or an Underwriters Laboratories Listed UL 103 HT (US)/ULC-S629 (CDN) Residential Type and Building Heating Appliance Chimney. Use a 6″/152mm diameter chimney, that is high enough to give a good draft. (See specifics in Chimney Connections instructions).
10. Be sure that your chimney is safely constructed and in good repair. Have the chimney inspected by the fire department or a qualified inspector. Your insurance company should be able to recommend a qualified inspector. Chimney connector pipe must be in good condition. Replace if necessary before using stove.
11. Creosote or soot may build up in the chimney connector and chimney and cause a house/building fire. Inspect the chimney connector and chimney twice monthly during the heating season and clean if necessary. (see Service Hints).
12. In the event of a chimney fire, turn the air controls to closed positions, leave the building and **CALL THE FIRE DEPARTMENT IMMEDIATELY!** Have a clearly understood plan on how to handle a chimney fire by contacting your local fire authority for information on proper procedures in the event of a chimney fire. After the fire is out, the chimney must be cleaned and inspected for any stress or cracks before starting another fire. Check the condition of any combustibles surrounding the chimney.
13. Ashes should not be allowed to accumulate above the top of the lower primary air orifice (LPAO, air vent at front of firebox, just inside of door).
14. **DISPOSAL OF ASHES** Ashes should be placed in a steel container with a tight fitting lid and moved outdoors immediately. The closed container of ashes should be placed on a noncombustible floor or on the ground, well away from all combustible materials, pending final disposal. If the ashes are disposed of by burial in soil or otherwise locally dispersed, they should be retained in the closed container until all cinders have completely cooled. Other waste shall not be placed in this container.
15. To prevent injury, do not allow anyone to use this stove who is unfamiliar with the correct operation of the stove.
16. Do not operate stove while under the influence of drugs or alcohol.
17. **DO NOT ELEVATE THE FIRE.** Build fire directly on the bottom of the firebox. This stove has not been tested with the use of grates, andirons or other means of elevating the fire and must not be used.
18. The special paints used on your stove may give off some smoke and an odor while they are cur-

ing during the first 12 to 15 fires. Additional smoke and odor may be emitted from the light oils used in construction of the fire box. This should disappear after a short period of time and not occur again. Persons with lung conditions or owners of susceptible domestic pets (such as birds) should take prudent precautions. Open windows and doors as needed to clear smoke and/or odor. Paint discoloration will occur if the stove is over fired.

19. This stove has a painted surface which is durable but it will not stand rough handling or abuse. Use care when installing your stove. After a period of use the firebox walls may become distorted. A slight distortion will not affect stove operation.
20. **CLEAN STOVE FREQUENTLY** as soot, creosote and ash may accumulate. Clean exterior with soap and warm water when stove is not hot. Do not use any acids or scouring soap, as these solvents wear and dull the finish.
21. **ALERT ALL PERSONS TO THE HAZARDS OF HIGH SURFACE TEMPERATURES** while stove is in operation – especially young children. Keep away from a hot stove to avoid burns or clothing ignition.
22. **NEVER LEAVE SMALL CHILDREN UNSUPERVISED WHEN THEY ARE IN THE SAME ROOM AS THE STOVE.** If small children will be in the same room as the stove during operation, provide a sturdy barrier to keep them at a safe distance from the stove.
23. Keep stove area clear and free from all combustible materials, gasoline, engine oil, naphtha and other flammable vapors and liquids.
24. **WHILE TENDING THE FIRE ALWAYS WEAR PROTECTIVE CLOTHING**, fire retardant hearth gloves and eye protection, to prevent burns.
25. **NEVER OPERATE THIS STOVE WITHOUT ASH DRAWER, ASH CLEAN OUT OR WITH THE DOOR OPEN** except when re-fueling. Such actions can result in very dangerous operating conditions.
26. **DO NOT OVER FIRE THE STOVE.** Over firing will occur if combustion air is uncontrolled as when feed door is left open during operation. Such actions can result in very dangerous operating conditions. While in operation, keep the feed door closed and secured at all times except while tending the fire
27. When adding fuel be careful not to smother the fire. Do not build fires against glass and do not load fuel to a height or in such a manner that it creates a hazard when opening the door.
28. **NEVER LEAVE THE STOVE UNATTENDED** with door open. Always close the door after ignition.
29. **DO NOT CONNECT TO OR USE IN CONJUNCTION WITH ANY AIR DISTRIBUTION DUCT WORK UNLESS SPECIFICALLY APPROVED FOR SUCH INSTALLATIONS.**
30. **A WOOD-BURNING STOVE MUST NEVER BE INSTALLED IN A HALLWAY OR NEAR A STAIRCASE**, as it may block egress in the event of a fire.
31. **DO NOT INSTALL IN A SLEEPING ROOM.**

    DO NOT INSTALL IN AN ALCOVE OR INSIDE A FIREPLACE.
32. Install at least one smoke detector on each floor of your home. Detectors should be located away from the heating appliance to avoid false alarms. Detectors should be located close to sleeping areas. Follow the smoke detectors manufacturer's placement and installation instructions. Maintain smoke detector per manufacturer's instructions.
33. **CARBON MONOXIDE (CO) HAZARD.** A buildup of CO fumes is toxic and can be fatal. Carbon Monoxide is a colorless, odorless gas produced during combustion of wood, coal, oil, gas and by other fuel burning appliances. It is important to have a proper draft and adequate replacement air ventilation so fumes are drawn out the chimney. Installed as instructed this stove is designed to be as safe as possible yet it is recommended to **install a CO detector**. Follow the manufacturer's recommendations for proper installation and use. It is recommended to be placed at table-top level (not near the ceiling) to avoid false alarms. Realize that devices other than a stove (i.e. motor exhaust) can trigger CO alarms.

    If alarm sounds:
    - Recognize the symptoms of CO poisoning (headaches, nausea & drowsiness).
    - Increase ventilation (open windows & doors).
    - Make sure stove doors and/or lids are closed and secured.
    - Check stove for smoking or puffing (open airflow controls).
    - Check chimney & connector pipe for leaks, blockage or down-draft conditions.
    - Check CO device for false alarm.
34. All power cords and electrical appliances and/or assemblies must be kept outside of the clearance area shown in this manual for combustible materials.
35. Consult your municipal building department or fire officials about restrictions, permits and installation requirements for your area.
36. For further information on using your stove safely, obtain a copy of the National Fire Protection Association (NFPA) publication, "Using Coal and Wood Stoves Safely" NFPA No. HS-10-1978. Write NFPA, Batterymarch Park, Quincy, MA 02269.

TABLE OF CONTENTS

SAFETY PRECAUTIONS ..... 2 – 3
TOOLS AND MATERIALS REQUIRED FOR INSTALLATION 5
ASSEMBLY INSTRUCTIONS ..... 5 – 6
LOCATING THE STOVE 7
Minimum Clearances ..... 7 – 8
INSTALLATION ..... 9 – 14
FIREBRICK ASSEMBLY 9
CONNECTOR PIPE INSTALLATION 10
CHIMNEY SIZING 11
CHIMNEY CONNECTIONS ..... 11 –14
CHIMNEY CONNECTION SYSTEMS & CLEARANCES 15
OPERATING INSTRUCTIONS
House Fire Hazards, Operating Precautions, Warnings 16
Wood Types/Sizes 16
Optimal Fuel Consumption 16
Starting a Fire 17
Adding Fuel 17
SERVICE HINTS
Creosote Formation, Prevention, Removal 18
Chimney Draft 19
Glass Care & Replacement 20
Glass Gasket Replacement 20
Door Gasket Replacement 21
OPTIONAL F-6 BLOWER MAINTENANCE & WIRING DIAGRAM 21
PARTS – SHILOH™ 22
PARTS – GLASS DOOR 23
PARTS – FIRE BRICK 23
FLOOR PROTECTOR CALCULATIONS 24
CHIMNEY & STOVE MAINTENACE LOG 25

NOTE: A LICENSED PROFESSIONAL HEATING AND COOLING CONTRACTOR SHOULD BE CONSULTED IF YOU HAVE QUESTIONS REGARDING THE INSTALLATION OF THIS SOLID FUEL BURNING APPLIANCE.

ASSEMBLY INSTRUCTIONS

NOTICE: Vogelzang International Corp. grants no warranty, stated or implied, for the installation or maintenance of your wood stove and assumes no responsibility of any incidental or consequential damages.

TOOLS AND MATERIALS REQUIRED FOR INSTALLATION

TOOLS

- **Pencil**
- **6 foot Folding Rule or Tape Measure**
- **Tin Snips**
- **Drill: Hand or Electric**
- **1/8˝ dia. Drill Bit (for sheet metal screws)**
- **Screwdrivers (blade and Phillips type)**
- **10mm Nut Driver or Ratchet with 10mm Socket**
- **Safety Glasses**
- **Gloves**
- **11/16 Socket or Wrench**

MATERIALS

(NOTE: The following items are NOT included with your stove)

Flooring Protection: as specified (see page 7)

Chimney Connection: 6˝ dia. minimum 24 MSG black or 26 MSG blue steel straight stove pipe or elbow(s) as required.

1/2˝ Sheet Metal Screws

Chimney: Existing 6˝ Code-approved Lined Masonry Chimney or 6˝ Inside Dia. UL 103 HT (US)/ULC-S629 (CDN) listed manufactured chimney.

Furnace Cement (manufacturer recommends Rutland Code 78 or equivalent)

CAUTION: STOVE IS HEAVY. MAKE SURE YOU HAVE ADEQUATE HELP AND USE PROPER LIFTING TECHNIQUES WHENEVER MOVING STOVE.

1. Uncrate the stove and remove all cardboard and styrofoam packing materials and protective poly bag. Remove pedestal base, sides, front, top, ash-drawer and ash drawer support from the carton. (Save packing materials for further assembly.)

   NOTICE: DO NOT remove ceramic blanket material from inside stove pipe opening (Fig. 1). This blanket provides an air seal on the side walls of the stove to direct combustion gasses over the secondary combustion tubes before exiting via the chimney. **DO NOT REMOVE the ceramic blanket** or your stove will not operate properly.

Figure 1 – DO NOT remove ceramic blanket from inside stove pipe opening. This is NOT packing material but an integral component of the stove combustion system.

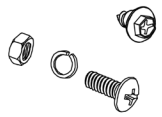

Figure 2 – Pedestal Assembly Hardware: sheet metal screws, 5/16˝ machine screw, lock washer & hex nuts

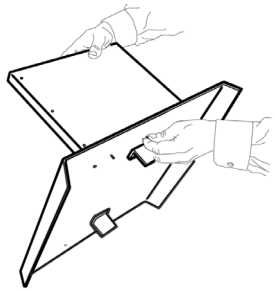

Figure 3 – Assemble sides to base

2. Remove parts and hardware pack located inside firebox.
3. Align the hole pattern of one of the pedestal sides to the holes in the base and secure with four (4) machine screws, lock washers and hex nuts. Assemble the opposite side to the base. (Note: Sides are interchangeable)

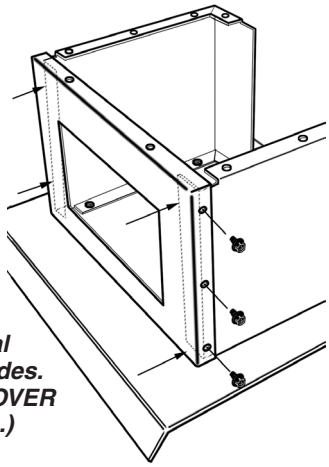

Figure 4 – Attach Pedestal Front Frame to Sides. (Note– front goes OVER the side panels.)

4. Attach the pedestal front frame to the sides. The pedestal front should go ***over*** (not inside of) the side panels. Use three (3) self-tapping screws (provided in the hardware pack) on each side to attach both pedestal sides to the pedestal front (figure 4).
5. Position ash drawer support into assembled pedestal (Figure 5) and secure from rear with two (2) machine screws, lockwashers and hex nuts. Tighten all pedestal hardware.
6. Position the pedestal top with the large vent hole positioned toward the front and attach with six (6)

continued on next page

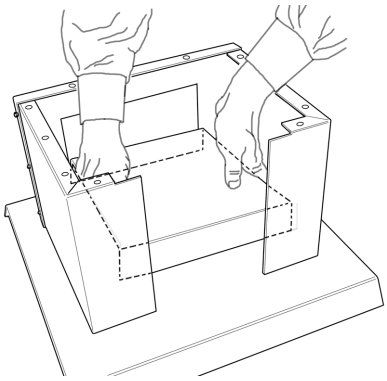

Figure 5 – Insert Ash Drawer Support.

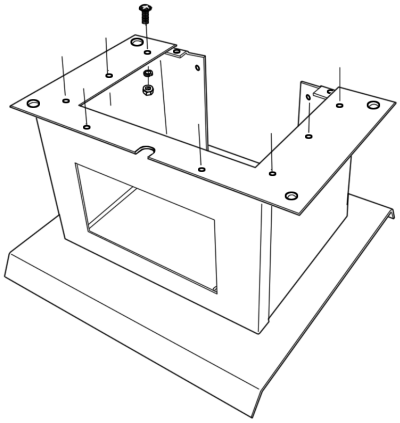

Figure 6 – Attach Pedestal Top.
(Note– Position vent orifice towards front.)

machine screws, lock washers and hex nuts. (See Figure 6)

7. Place flattened carton/styrofoam packing material on floor and carefully tip the stove body onto it's back.
8. Align four (4) corner mounting studs with holes in pedestal top (Figure 7). Secure with four (4) hex nuts.

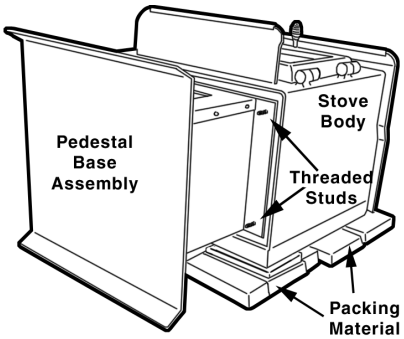

Figure 7 – Attach Pedestal to Stove Body

9. Tip the stove assembly upright.
10. Set the ash drawer inside the open box formed by the pedestal front and sides.
11. For **Optional Blower Assembly**, note the position of the blower opening in the rear of the stove.
12. Place blower gasket onto blower assembly (Figure 8) so as not to obstruct the air flow from the fan.
13. Mount the blower assembly to the back of the stove (Figure 9) aligning the fan opening to the opening in the back of the stove. Secure with four sheet metal screws.

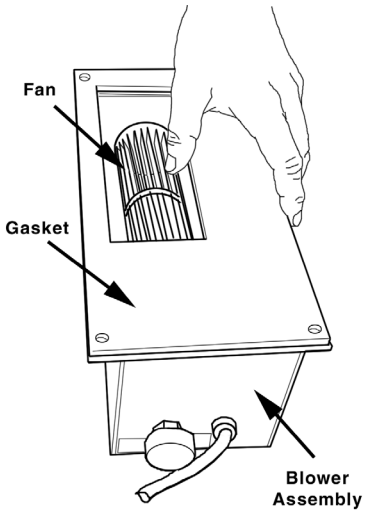

Figure 8 – Blower Option

14. Route the power cord away from stove. Do not allow the power cord to touch any hot surfaces. Keep power cord at least 12˝ from stove surfaces.
15. Once stove is positioned, plug power cord into a grounded 120v outlet.

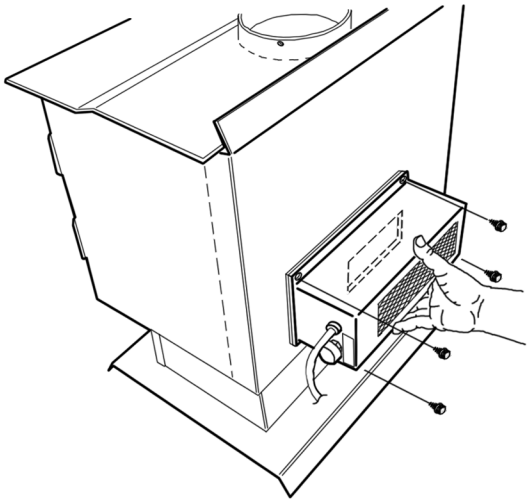

Figure 9 – Attach Optional Blower to Stove Body

16. After assembly, check to make sure fire brick are properly positioned and ash cleanout cover is in place.

LOCATING STOVE

1. The stove must be placed on solid concrete, solid masonry, or when installed on a combustible floor, on an UL 1618 Type 2 listed floor protector, such as Hy-C or Imperial Model UL 3648BK (US) or UL4048BK (CAN) or equivalent. **Floor protector must be 1/2˝/13mm minimum thickness** ("k" value = 0.84, R value = 0.59, see page 24 for calculation formulas) non-combustible material or equivalent. **US Requirements:** The floor protector must extend at least 16˝/41cm beyond the front of the access door, 6˝/15.2cm to the sides and 12˝/30.5cm beyond the rear. Floor protection material must extend under and 2˝/51mm beyond either side of the stove pipe connector if it is elbowed towards a wall. (See figures 10–12 and consult local building codes and fire protection ordinances.) **Canadian Requirements:** The base must extend at least 18˝/46.8cm beyond the front of the access door, 8˝/20.3cm to the sides, 8˝/20.3cm behind the stove and must extend under and 2˝/51mm beyond either side of the stove pipe if it is elbowed towards a wall. (See figures 10–12 and consult local building codes and fire protection ordinances).

CAUTION: (FIRE HAZARD) CARPETING AND OTHER COMBUSTIBLE MATERIAL SHALL NOT COVER THE FLOOR PROTECTOR. THESE MATERIALS MUST REMAIN OUTSIDE OF COMBUSTIBLE CLEARANCES, SEE FIGURES 10 – 12.

2. The room in which he stove is installed must have a minimum floor to ceiling height of 8 ft./2.4 m & a minimum stove top to ceiling height of 55˝/140 cm.
3. The stove must have its own flue. Do not connect this unit to a chimney flue serving other appliances.
4. After observing the clearances to combustible materials (figures 10–12), locate your floor protector accordingly (figure 10) and carefully place the stove in your selected location. Install stove pipe, elbows, and thimble as required, utilizing either a recently cleaned and inspected 6˝/152mm masonry chimney or a 6˝/152mm i.d. UL 103 HT (US)/ULC-S629 (CDN) listed manufactured chimney.
5. Use round 6˝/152mm dia., minimum 24 MSG black or 26 MSG blue steel stove pipe to connect the stove to the chimney. DO NOT USE GALVANIZED DUCT PIPE AS A CONNECTOR. Secure pipe sections with three (3) sheet metal screws no more than a maximum of 3˝/76mm apart in each stove pipe and/or elbow joint to firmly hold the pipe sections together. DO NOT CONNECT THIS STOVE TO ANY AIR DISTRIBUTION OR DUCT SYSTEM.
6. Recheck clearances from the stove, connector stove pipe, and corner clearances using the illustrations in figures 10–12 and your local building codes or fire protection ordinances.

NOTICE: Any wall containing combustible materials such as wooden studs, drywall and faced with brick or stone MUST be considered a combustible surface.

7. **DO NOT install this stove in a mobile home, manufactured home, trailer or tent – NO EXCEPTIONS! (HUD Federal Standard: 24 CFR Ch.xx)**
8. The clearances provided are minimum dimensions set by UL 1482-2010 & ULC-S627-00, tested and applied by OMNI Test Laboratories, Inc., the manufacturer's testing laboratory.

   Clearances listed and shown **MUST** be adhered to for safe operation of this appliance. **CLEARANCES MAY NOT BE REDUCED BY ANY MEANS IN USA OR CANADA.**

continued on next page

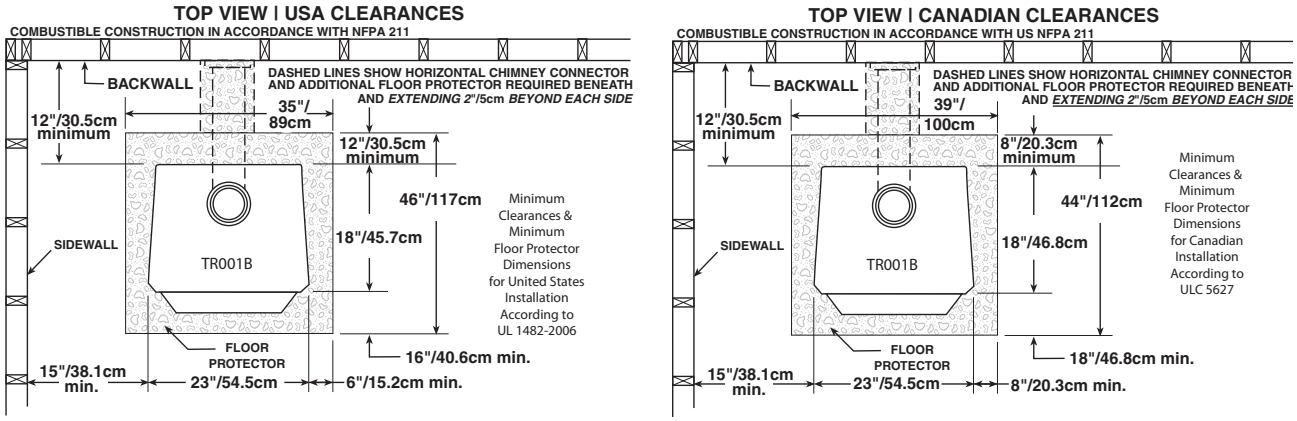

Fig. 10 – Top View Minimum Clearance Dimensions from Combustible Surfaces

Failure to follow these minimum clearance requirements may result in an unsafe installation and could cause a fire.

Installation of this stove must comply with the latest edition of NFPA 211 for reduced clearances and/or your local building code rulings. Use whichever minimum dimensions are the LARGEST.

9. **NEVER OPERATE THIS STOVE WITHOUT THE ASH CLEANOUT COVER IN PLACE OR WITH THE ASH DRAWER REMOVED** – very dangerous operating conditions could result.
10. This stove meets U.S. Test Standard: UL 1482-2010 & Canadian Standard: ULC-S627-00.
11. Always locate stove to provide a source of fresh air into the room where the unit is installed. Failure to do so may result in air starvation of other fuel burning appliances and the possible development of hazardous conditions.

CAUTION: KEEP FURNISHINGS AND OTHER COMBUSTIBLE MATERIALS AWAY FROM THE STOVE AND OUTSIDE MINIMUM CLEARANCES.

CAUTION: REPLACE FIREBRICKS BEFORE FIRING WOODSTOVE. POSITION FIREBRICKS SO NO GAPS REMAIN BETWEEN BRICKS.

CORNER CLEARANCES

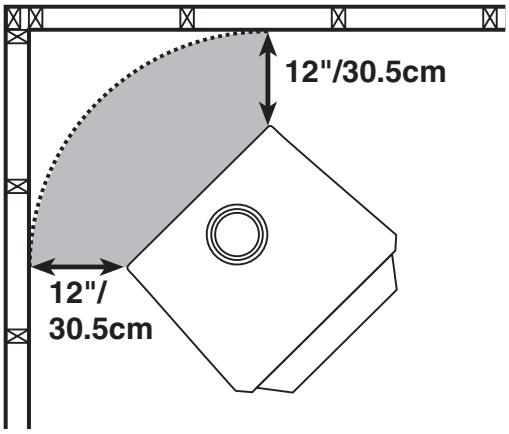

Fig. 11 – Top View
Minimum Corner Clearances from Combustible Surfaces

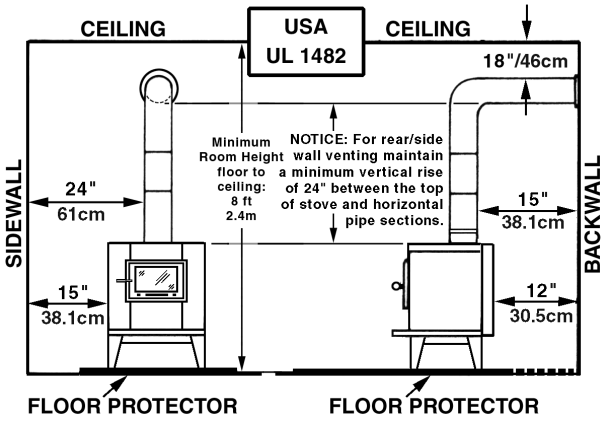

Fig. 12a – Front View *Fig. 12b – Side View*
Minimum Clearance Dimensions from Combustible Surfaces

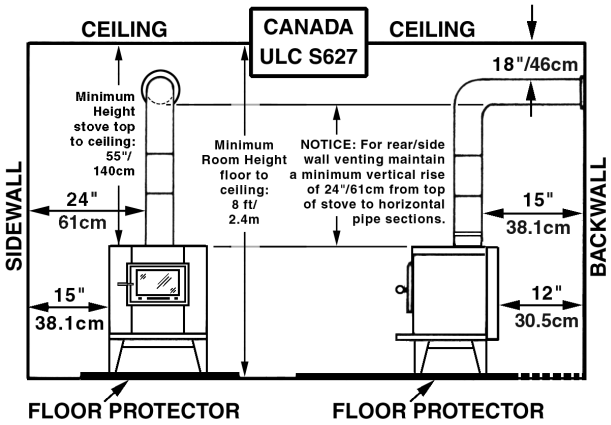

Fig. 12c – Front View *Fig. 12d – Side View*
Minimum Clearance Dimensions from Combustible Surfaces

FIREBRICK ASSEMBLY

Firebrick extends the life of your stove and radiates heat more evenly. Check to see that all firebricks are in their correct positions and have not become misaligned during shipping or assembly. If removed for ease of locating stove, firebrick and ash dump cover must be replaced before firing. See diagrams, fig. 13a – 13c, for proper positioning.

CAUTION: NEVER OPERATE STOVE WITH MISSING OR CRACKED FIRE BRICKS!

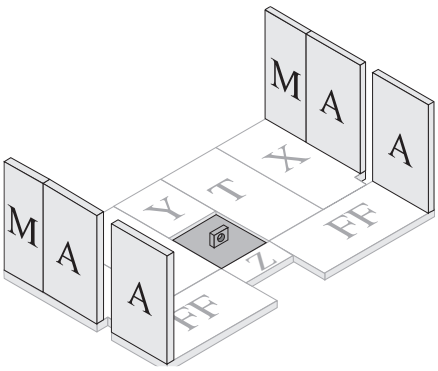

Fig. 13b– Step 2, Side Firebrick Installation
Four (4) A-Size; Two (2) M-Size

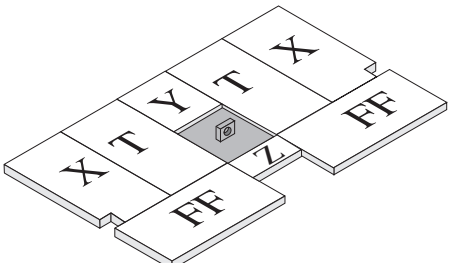

Fig. 13a– Step 1, Bottom Firebrick Installation
Two (2) FF-Size; Two (2) T-Size; Two (2) X -Size; One (1) Y-Size; One (1) Z-Size

A-Size: 9˝x4 1/2˝x1 1/4˝
FF-Size: 9˝x4 1/4˝x1 1/4˝
M-Size: 9˝x2 1/4˝x1 1/4˝
T-Size: 9˝x3 1/4˝x1 1/4˝
*X-Size: 9˝x4 1/2˝x1 1/4˝***
Y-Size: 4 1/2˝x3˝x1 1/4˝
Z-Size: 3˝x2 1/2˝x1 1/4˝
*** X Firebricks are notched for air tube clearance*

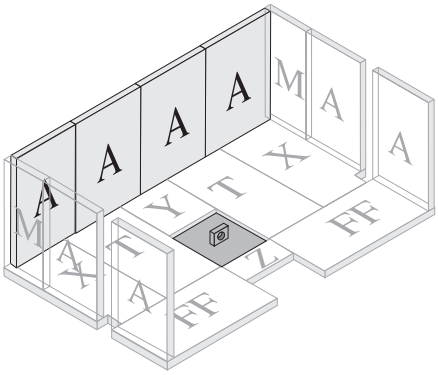

Fig. 13c– Step 3, Back Firebrick Installation
Four (4) A-Size

CONNECTOR PIPE INSTALLATION

NOTE: CONNECTOR PIPE IS *NOT INCLUDED*. TO PURCHASE, VISIT YOUR LOCAL HARDWARE, HOME OR BUILDING CENTER. SEE "LOCATING STOVE" PAGE 6 FOR ADDITIONAL SPECIFICATIONS.

Connector pipe is used to make the connection from the final positioning of your stove to an approved chimney. Connector pipe is NOT included as part of the stove. Connector pipe must be 6″/152mm diameter minimum of 24 MSG (minimum standard gauge) black or 26 MSG blue steel stove pipe. Connector pipe is NOT rated to provide close contact to combustible materials and must have proper clearance from combustible materials as shown in the clearance diagrams on the previous pages. Connector pipe should never be used in place of a chimney. If proper clearances are not observed a house fire could result.

INSTALLATION INSTRUCTIONS

PLEASE NOTE: Installation of a draft damper is NOT recommended. Combustion control is regulated by the intake of combustion air, not the exhaust.

1. The tapered end of the connector stovepipe fits into the stove flue collar. Secure with three sheet metal screws. Notice: For side or rear venting, you must have a minimum 24″/61cm vertical rise from top of stove to horizontal pipe sections (see figure 12).
2. Horizontal pipe must slope up towards the chimney at least 1/4″/6.4mm per foot of horizontal run.
3. You must have at least 18″/46cm of clearance between any horizontal piping and the ceiling.
4. The pipe cannot extend into the chimney flue (see figure 14).
5. Secure pipe/elbow sections with three sheet metal screws at each joint to make the piping rigid. Screws may be no more than a maximum of 3″/76mm apart.
6. It is recommended that no more than two (2) 90 degree bends be used in the stovepipe installation. The use of more than two 90 degree bends may decrease the amount of draw and possibly cause smoke spillage. Where possible, use only corrugated (nonadjustable) elbows. These provide a better seal.
7. The connector pipe must not pass through an attic or roof space, trusses, closet, or any concealed space, or floor, ceiling, wall or combustible construction. (See Chimney Connector Systems & Clearances, page 15). A UL 103 HT (US)/ULC-S629 (CDN) listed chimney must be used from the first penetration of ceiling or wall to the chimney cap.

   Where passage through a wall or partition of combustible construction is desired, the installation shall conform to NFPA 211 (US) or CAN/CSA-B365 (Canada)

WARNING: DO NOT USE SINGLE WALL CONNECTOR PIPE AS A CHIMNEY - A HOUSE FIRE COULD RESULT.

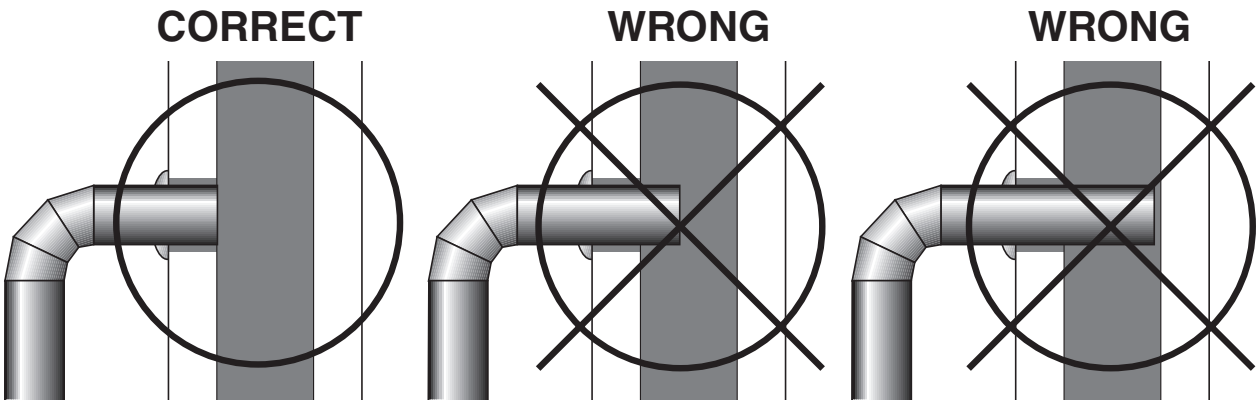

Fig. 14 – Stovepipe/Flue Connections

CHIMNEY SIZING

Today's solid fuel heating appliances are much more efficient than those made in the past. Your heating appliance has been designed to provide the most efficient transfer of heat possible from the least amount of fuel.

Controlled combustion is the key to optimum heating performance. Controlled combustion requires a flow of fresh air into the appliance, across the fuel and is finally exhausted up the chimney.

Today's high efficiency stoves transfer more heat into the living area and less up the chimney. Exhaust gases are typically at a lower temperature than traditional type stoves. With lower exhaust temperatures, it is important that the chimney is correctly sized to the stove. If the chimney diameter is too large, it will be difficult to raise the chimney flue temperature to provide for adequate draft. This may result in a poor burn, smoke spillage, and rapid creosote creation. A 6″/152mm diameter chimney is best suited for this stove.

Your heating appliance must have a minimum of a 6″/152mm diameter chimney. Maximum chimney diameter must not exceed 10″/254mm or have a cross sectional area greater than 85 sq. in. /550cm^2.

Proper draft for this heating appliance is minimum of 0.05 w.c. (water column measurement) and is required to prevent back puffing, smoke spillage and prevent safety hazards.

CHIMNEY CONNECTIONS

The stove must be connected to either a masonry or manufactured metal chimney built and tested to the specifications listed on the previous pages.

Chimneys perform two functions:

1). As a means of exhausting smoke and flue gases which are the result of fuel combustion.

2). The chimney provides a natural "draft" which allows oxygen to be continuously introduced into the appliance, so that proper combustion is possible. Insufficient draft will not allow this stove operate properly.

NOTICE: Always provide a source of fresh air into the room where the stove is located. Failure to do so may result in air starvation of other fuel burning appliances and the possible development of hazardous conditions.

A stove does NOT create draft. ***Draft is provided by the chimney.*** To achieve proper draft your chimney must meet the four minimum height requirements detailed in figures 16 – 18. ***If these minimum requirements are not met, your stove will not operate properly.*** A minimum of 0.05 w.c. (measured in water column) is required for proper drafting to prevent back puffing, smoke spillage, and to maximize performance. (Gauges to measure draft are readily available at stove stores and are economical to rent or purchase.)

Factors such as wind, barometric pressure, trees, terrain and chimney temperature can have an adverse effect on the draft. The manufacturer cannot be held responsible for external factors leading to less than optimal drafting.

Should you have a problem with inadequate draft, you should contact a licensed heating and cooling contractor for assistance in solving the problem.

IMPORTANT Installation Points

1. Size chimney flue to stove collar. This stove requires a 6″/152mm diameter flue. (see Chimney Sizing)
2. Never connect this unit to a chimney serving another appliance.
3. The chimney must meet all minimum height requirements.
4. Never use a chimney to ventilate a cellar or basement.
5. Contact your local building authority for approved methods of installation and any necessary permits and/or inspections.

MASONRY CHIMNEY

Before using an existing masonry chimney, clean the chimney, inspect the flue liner and make any repairs needed to be sure it is safe to use. Make repairs before attaching the stove. The connector stove pipe and fittings you will need to connect directly to a masonry chimney are shown in figure 15.

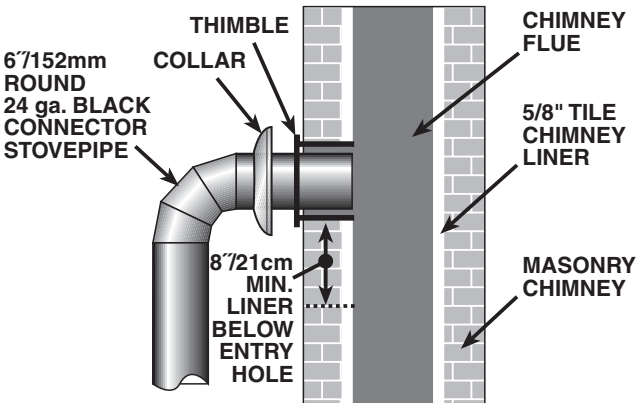

Fig.15 - Masonry Chimney Connection

If the connector stove pipe must go through a combustible wall before entering the masonry chimney, consult a qualified mason or chimney dealer. The installation must conform to local building and fire codes and latest edition of NFPA 211 (US) or CAN/CSA-B365 (CDN).

If there is a cleanout opening in the base of the chimney, close it tightly.

Chimney Minimum Height Requirements:
(1) Overall Height – 15 ft./4.6m min.
(2) Height above roof – 3 ft./91cm
(3) Height above slope – 2 ft./61cm min. within 10 ft./3.05m
(4) Minimum rise before horiz. section – 24 in./61cm

NOTICE: IF MINIMUM CHIMNEY REQUIREMENTS ARE NOT MET, YOUR STOVE WILL NOT OPERATE PROPERLY.

MANUFACTURED CHIMNEY

REFER TO CHIMNEY AND CHIMNEY CONNECTOR MAKER'S INSTRUCTIONS FOR INSTALLATION AND USE.

Use only 6"/152mm diameter listed chimney UL 103 HT (US)/ULC-S629 (CDN). Chimney made to this listing is High Temperature rated to 2100°F/1149°C. Use chimney from only one manufacturer. Never mix brands. Carefully follow the chimney manufacturer's stated requirements and clearances. Use the chimney manufacturer's attic guards, roof supports, flashing, radiation shields and fire stops when passing through a ceiling. Use a listed wall pass-thru when passing through a combustible wall. Do not use makeshift compromises during installation. See Appendix on page 24.

WARNING: DO NOT USE A SINGLE-WALL CONNECTION PIPE AS A CHIMNEY. A HOUSE FIRE COULD RESULT!

When using a pre-existing chimney, have its condition and installation inspected before using. Make sure that the chimney meets all of the UL rating requirements listed above. Be aware that not all manufactured chimney is of the UL 103 HT/ULC-S629.

NOTE: It is recommended that you contact a licensed heating and cooling contractor (consult your local yellow pages) for chimney installation.

Manufactured chimney with the proper required UL/ULC listing is available from most home centers, hardware stores, and HVAC supply stores.

You may wish to view chimney manufacturers' information on-line. See, www.duravent.com, www.selkirkinc.com, or www.mtlfab.com.

continued on next page

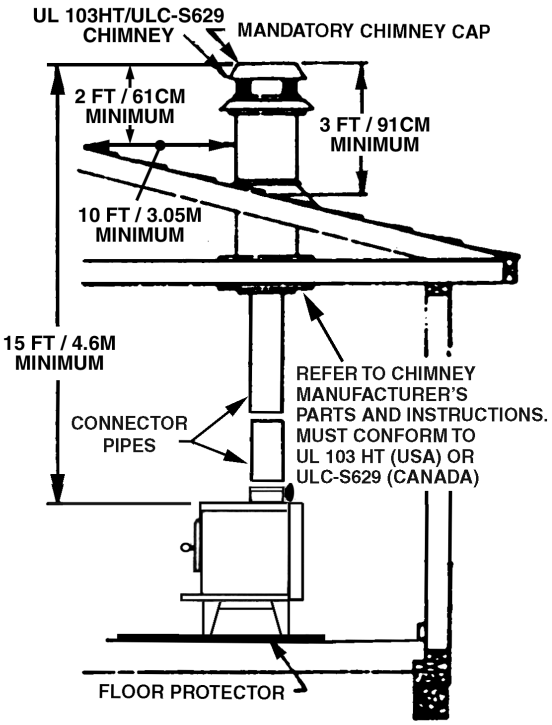

Fig. 16 - Chimney Construction Through Attic Space

NOTICE: IF MINIMUM CHIMNEY REQUIREMENTS ARE NOT MET, YOUR STOVE WILL NOT OPERATE PROPERLY.

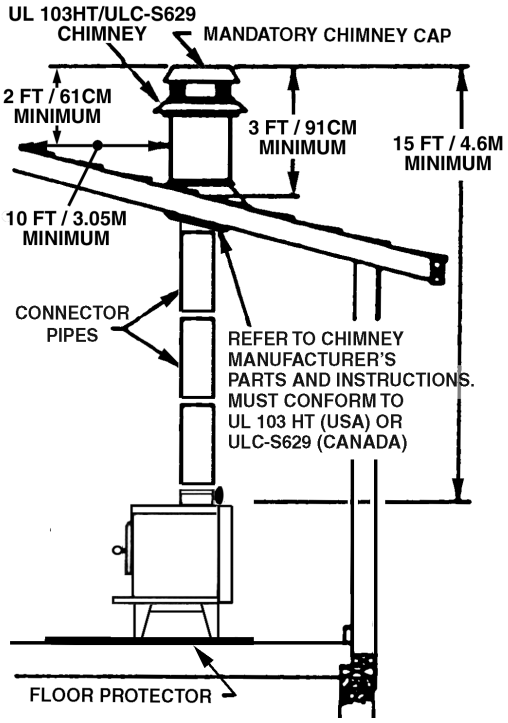

Fig. 17 - Chimney Construction Through Roof

VENTING TO EXISTING FIREPLACE

In some instances, people desire to convert an existing fireplace for stove use. Usually, safe connection to an existing masonry chimney requires more work than using a prefabricated chimney. The existing fireplace must be closed and sealed at the damper with high-temperature caulk, ceramic wool, or furnace cement. Prior to installation, clean and inspect the existing flue and smoke shelf. Installation should be designed so the system can be dismantled for periodic cleaning and inspection. **Before conversion, make sure the existing chimney is structurally sound, the chimney incorporates a flue liner and make sure it is in good condition.** (A flue liner consists of clay tile that protects the brickwork of a chimney. If a chimney does not have a liner, or it is damaged, have it relined by a professional. ***Do Not use a chimney that is unlined or damaged!***) If you have any question regarding the condition of the chimney, consult a qualified licensed contractor, qualified engineer, competent mason, certified Chimney Sweep, or a knowledgeable inspector. Consult your insurance company if you cannot find a qualified expert.

CAUTION: NOT ALL FIREPLACES ARE SUITABLE FOR CONVERSION TO ACCOMMODATE A WOOD STOVE. CHECK WITH A QUALIFIED EXPERT.

Many prefabricated fireplaces are of the "zero-clearance fireplace" category. These consist of multi layered metal construction. They are designed with enough insulation and/or air cooling on the base, back and sides so they can be safely installed in direct contact with combustible floors and walls. Although many prefabricated fireplaces carry endorsements from nationally recognized organizations for use as fireplaces, they have not been tested for connection to wood stove heaters. Connecting a stove to such a device will void the manufacturer's warranty.

Venting a stove directly into a fireplace does not meet code and should not be attempted. The stove warranty will be void with such an installation. Do not create a hazard in your home by connecting in this manner.

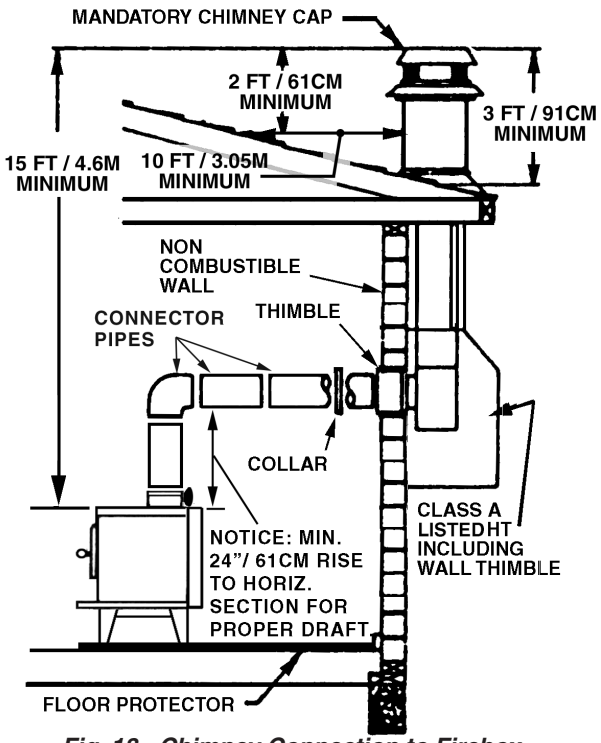

Fig. 18 - Chimney Connection to Firebox Through Masonry Wall

FIREPLACE INSTALLATION

NOTE: DO NOT ATTEMPT TO ROUTE THE CHIMNEY CONNECTOR PIPE THROUGH THE THROAT OF THE FIREPLACE.

Directly connecting the stovepipe into the existing masonry chimney (figure 15 "Type A" Fireplace Conversion) of the fireplace is the only approved method of installation. This is a complicated and involved process and to insure safety should only by done by a qualified installer.

1. An entry hole must be cut through the masonry and tile liner with minimal damage to the liner. At

continued on next page

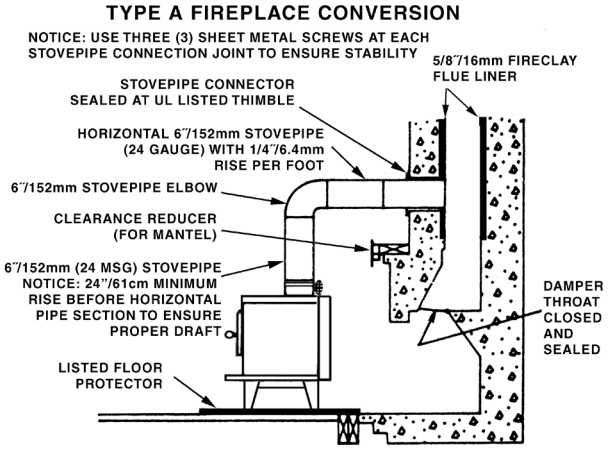

Fig. 19 - Fireplace Conversion

least 8″/203mm of liner must remain below the entry position. When locating the stove and stovepipe, all minimum clearances must be observed from combustible surfaces including mantels, combustible trim work, ceilings and walls. Positioning the center of the stove pipe entry into the chimney 24″/61cm below the ceiling should insure proper clearance for a 6″/152mm stovepipe.

2. Install a metal or fire clay (5/8″/16mm minimum thickness) thimble. Make sure the thimble is flush with the inner surface of the chimney liner and does not protrude into the flue (see figures 14 & 15 on pages 10 & 11).
3. Secure the thimble with refractory mortar. The thimble should be surrounded by 12″/305mm of solid unit masonry brickwork or 24″/61cm of stone.
4. Install the stovepipe into the thimble as far as possible without extending past the flue lining (see figures 14 & 15 on pages 10 & 11).
5. A small airspace (about 1/2″/13mm) should remain between the stovepipe and thimble to allow for expansion of the pipe. Seal this airspace with high-temperature caulking or ceramic wool.
6. Secure and seal the damper in the closed position using high-temp caulking, ceramic wool, or furnace cement. Also check to see if the chimney has a cleanout. If it does, make sure it is closed and sealed as well. A leaky cleanout will greatly reduce draft efficiency.

If you have any questions regarding venting your stove, contact the manufacturer or contact the National Fire Protection Association (NFPA) and request a copy of the latest editions of NFPA Standard 211 and NFPA Standard 908. Their address is:

National Fire Protection Association
Battery March Park, Quincy, MA 02269.

NOTE: DO NOT ATTEMPT TO ROUTE THE CHIMNEY CONNECTOR PIPE THROUGH THE THROAT OF A FIREPLACE.

CHIMNEY CONNECTOR SYSTEMS & CLEARANCES

NOTE: IN CANADA, THE INSTALLATION MUST CONFORM TO CAN/CSA-B365 WHEN PASSING THROUGH COMBUSTIBLE CONSTRUCTION.

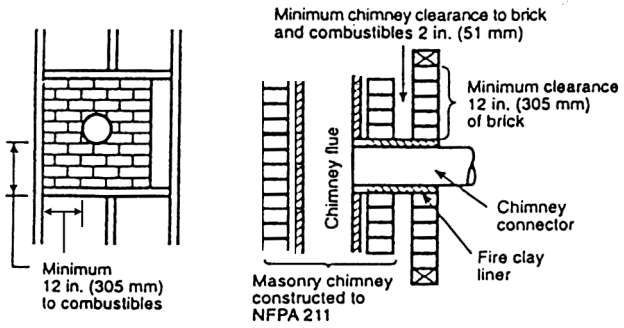

A. Brick Masonry

Minimum 3.5″/89mm thick brick masonry all framed into combustible wall with a minimum of 12″/305mm brick separation from clay liner to combustibles. The fireclay liner shall run from outer surface of brick wall to, but not beyond, the inner surface of chimney flue liner and shall be firmly cemented in place.

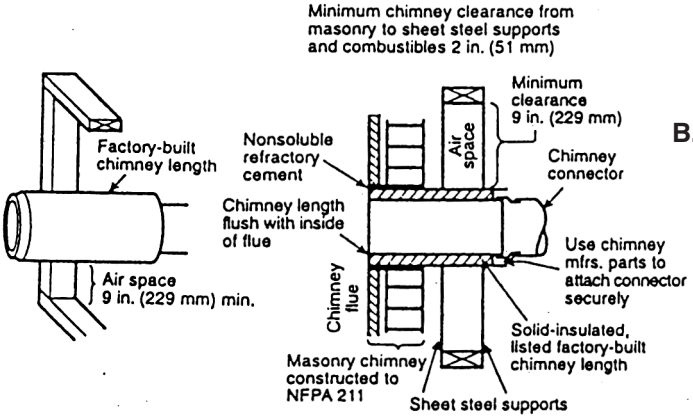

B. Insulated Sleeve

Solid-insulated, listed factory-built chimney length of the same inside diameter as the chimney connector and having 1″/25.4cm or more of insulation with a minimum 9″/229mm air space between the outer wall of the chimney length and combustibles.

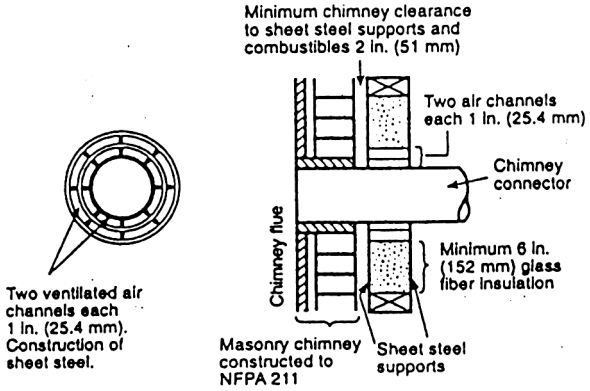

C. Ventilated Thimble

Sheet steel chimney connector, minimum 24 gauge in thickness, with a ventilated thimble, minimum 24 gauge in thickness, having two 1″/25.4mm air channels, separated from combustibles by a minimum of 6″/152mm of glass fiber insulation. Opening shall be covered, and thimble supported with a sheet steel support, minimum 24 gauge in thickness.

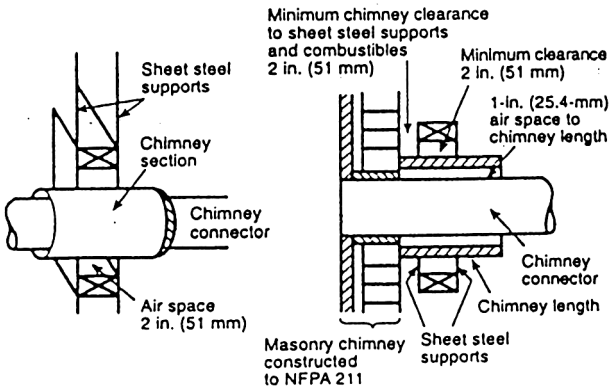

D. Chimney Section Pass-through

Solid insulated, listed factory-built chimney length with an inside diameter 2″/51mm larger than the chimney connector and having 1″/25.4mm or more of insulation, serving as a pass-through for a single wall sheet steel chimney connector of minimum 24 gauge thickness, with a minimum 2″/51mm air space between the outer wall of chimney section and combustibles. Minimum length of chimney section shall be 12″/305mm chimney section spaced 1″/25.4mm away from connector using sheet steel support plates on both ends of chimney section. Opening shall be covered, and chimney section supported on both sides with sheet steel support securely fastened to wall surfaces of minimum 24 gauge thickness. Fasteners used to secure chimney section shall not penetrate chimney flue liner.

CAUTION: HOUSE FIRE HAZARDS

- **DO NOT STORE WOOD ON FLOOR PROTECTOR, UNDERNEATH STOVEPIPE OR ANYWHERE WITHIN MINIMUM CLEARANCES FROM COMBUSTIBLE SURFACES SPECIFIED FOR THIS STOVE.**
- **OVER FIRING MAY CAUSE A HOUSE FIRE. YOU ARE OVER FIRING IF A UNIT OR CHIMNEY CONNECTOR GLOWS RED.**

OPERATING SAFETY PRECAUTIONS

1. **NEVER OVER FIRE THIS STOVE BY BUILDING EXCESSIVELY HOT FIRES AS A HOUSE/BUILDING FIRE MAY RESULT. YOU ARE OVER FIRING THE STOVE IF UNIT OR STOVEPIPE BEGINS TO GLOW OR TURN RED.**
2. **NEVER BUILD EXTREMELY LARGE FIRES IN THIS TYPE OF STOVE AS DAMAGE TO THE STOVE OR SMOKE LEAKAGE MAY RESULT**
3. **DO NOT BUILD FIRE TOO CLOSE TO GLASS.**
4. **UNIT IS HOT WHILE IN OPERATION. KEEP CHILDREN, CLOTHING, AND FURNITURE AWAY. CONTACT MAY CAUSE SKIN BURNS. DO NOT TOUCH THE STOVE AFTER FIRING UNTIL IT HAS COOLED.**
5. **PROVIDE AIR INTO THE ROOM FOR PROPER COMBUSTION.**
6. **INSPECT STOVEPIPE EVERY 60 DAYS. REPLACE IMMEDIATELY IF STOVEPIPE IS RUSTING OR LEAKING SMOKE INTO THE ROOM.**

WARNING: EXPLOSION HAZARD

- **NEVER USE CHEMICALS, GASOLINE, GASOLINE-TYPE LANTERN FUEL, KEROSENE, CHARCOAL LIGHTER FLUID, OR SIMILAR FLAMMABLE LIQUIDS TO START OR "FRESHEN-UP" A FIRE IN THE STOVE.**
- **KEEP ALL FLAMMABLE LIQUIDS, ESPECIALLY GASOLINE, OUT OF THE VICINITY OF THE STOVE— WHETHER IN USE OR IN STORAGE.**

THIS STOVE IS DESIGNED TO BURN WOOD FUEL ONLY!

Hardwood, 16˝/41cm to 18˝/46cm must be air dried (seasoned) for a minimum of 6 months. Logs greater than 6˝/152mm in diameter should be split. Wood should be stored in a dry, well ventilated area. The humidity content for usable firewood must be less than 20% of the weight of the log.

Attempts to use wet or unseasoned wood will cause:

- ignition problems
- rapid creosote build-up resulting in chimney fire
- incomplete combustion
- low heat yield
- blackened glass

NOTICE: USE SOLID WOOD MATERIALS ONLY. DO NOT BURN GARBAGE OR FLAMMABLE FLUIDS SUCH AS GASOLINE, NAPHTHA OR ENGINE OIL. DO NOT USE COAL. THIS STOVE IS NOT DESIGNED TO ACCOMMODATE THE AIR FLOW (DRAFT) NECESSARY TO PROPERLY BURN COAL OR COAL PRODUCTS. DO NOT ELEVATE FIRE OR USE GRATES OR ANDIRONS. BUILD FIRE DIRECTLY ON BOTTOM OF FIREBOX.

OPTIMAL FUEL CONSUMPTION

This stove is designed to get the most efficient transfer of heat energy from the wood fuel and radiate it into your living environment. The fire box introduces combustion air through three sources. (1) Immediately beneath the door opening below the window is a Lower Primary Air Orifice (LPAO). (2) The door air inlet control brings air into the firebox and controls the rate of burn (and the amount of heat the stove radiates). (3) The secondary air tubes at the top of the firebox are designed to ignite the combustion gases (smoke) given off by the burning wood and increases the efficiency of the stove and reduces chimney emissions.

Smoke given off by burning fuel consists of very small organic liquid droplets. If these droplets condense, they form a sticky tar-like substance called creosote. When operated properly, this stove is designed to burn these droplets. Burning these droplets releases heat that would otherwise be lost up the chimney as smoke. Following the instructions below will help you operate your stove properly to maximize the stove's performance. Actual performance is dependent on chimney height, weather, log size, wood species and moisture

continued on next page

content. Some experimentation will initially be required to find that "sweet spot" where your stove performs best. The following will give you a starting point to find your optimum settings.

When first loading fuel set the door air inlet control at the wide open position for at least 15–20 minutes. When the stove is working properly you should be able to observe secondary combustion flames above the fuel pieces in front of the secondary air tubes at the top of the firebox. These secondary flames should continue to burn after the primary air inlet is reset from wide open to the desired operating setting. If the flames do not continue to burn, open the air control to re-establish the secondary flames then slowly reset the air control to the desired setting. Initially it may take several attempts to figure your stove out. But once you find the operating "sweet spot" and the correct mix of procedures to get there, only minor adjustments will be necessary.

The best indicator of a properly operating stove is to look for smoke coming out of the chimney. You may see steam emissions that will quickly dissipate. Smoke will thin but continue to drift without totally disappearing. If you do detect smoke emissions, open the air control a little bit, let the stove adjust for 10–15 minutes and re-check your chimney. Remember – visible smoke represents lost heat.

NOTICE - INITIAL BURNS TO CURE PAINT
Because of the high operating temperatures, this stove uses a special high-temp paint which requires a series of burns to cure the paint for durability and a lifetime of service.

Proper curing of the high-temp paint requires a series of three initial burns. The stove should be allowed to cool off between each burn. The first two burns should be small fires and low temperatures (250°F/120°C) for a duration of 20 minutes each. The third fire should be at a medium-high temperature (500–700°F/260–370°C) for twenty minutes. Provide adequate cross ventilation to clear any smoke or odor caused by initial firings.

STARTING A FIRE

1. Set air inlet control to fully open position (slide to right).

   NOTE: Open/High=right, Closed/Low=left.
2. Open the feed door and place several wads of crushed paper in the firebox.
3. Cover the paper with a generous amount of kindling in a teepee fashion and a few small pieces of wood.
4. Ignite the paper and leave the door open slightly.

   DO NOT LEAVE STOVE UNATTENDED WITH DOOR OPEN! Except while tending the fire, operating the stove with the feed door open or ash clean out cover removed may cause over firing resulting in unsafe operating conditions.
5. Add large pieces of wood as the fire progresses being careful not to overload. (Do not fill firebox beyond firebrick area.) An ideal coal bed of 1 – 2″ (25mm - 50mm) should be established to achieve optimum performance.
6. This unit is designed to function most effectively when air is allowed to circulate to all areas of the firebox. TIP: If ash or coals remain in the stove, make sure to clear them away from the Lower Primary Air Orifice (LPAO) and rake a slight (1 – 2″/25mm-50mm wide) trough down the center of the coal bed from front to back prior to loading the fuel.
7. Once fuel has been loaded, close the door and leave the air inlet control fully open until fire is well established (at least 15–20 minutes) being careful not to over fire (if any of the exterior parts of the stove or chimney connections begin to glow you are over firing the stove).
8. Re-adjust the air inlet control to desired burn rate. For "low" setting slide control all the way to left, for "high" slide all the way to right. (If excessive smoke fills the firebox, open air inlet control slightly until flames resume and wood is sufficiently ignited.) The basic rule of thumb is "closed = low," "half way open = medium" and "fully open = high."

ADDING FUEL

If the coal bed is not hot and glowing, rake the coals to the front of the stove, close the door and adjust the air inlet control to the wide open position. Let the coals re-heat for 10–15 minutes. When hot and glowing, spread them out and place your next fuel load into the stove (make sure no coals or ashes block the LPAO). Leave the door air inlet control in the wide open position for 15–20 minutes.

Fuel load size can vary but should be kept 1–2″ (25mm-50mm) below the secondary air tubes. Also position the fuel to leave space so the air from the LPAO inlet can work down between the pieces of fuel. This reduces the time it takes for new fuel to burn properly.

1. When refueling, adjust air inlet control to the fully open position. When fire brightens, slowly and carefully open the door. This procedure will prevent gases from igniting causing smoke and flame spillage.

continued on next page

2. When adding fuel be careful not to hit or bump the ceramic baffle board located at the top of the firebox.
3. Add fuel being careful not to overload or over fire the stove.
4. When adding fuel be careful not to smother the fire. Do not build fires against glass and make sure the coal bed does not obstruct the air inlet. Do not add fuel to such a height or in such manner that it creates a hazard when opening the door.
5. Close the feed door and secure tightly.
6. Adjust the air inlet control as described above.
7. Empty ashes regularly. Do not allow ashes to pile up (see Safety Instructions #14 on page 2.)
8. Properly dispose of hot ashes (see Safety Instructions, item #14 on page 2.)
9. Do not over fire the stove (over firing is when any part of the stove exterior or chimney connections glow).

CAUTION: DO NOT OVER FIRE APPLIANCE. YOU ARE OVER FIRING IF THE CHIMNEY CONNECTORS OR STOVE GLOWS RED. CLOSE THE DOOR AND SHUT DAMPER IMMEDIATELY TO REDUCE THE AIR SUPPLY AND SLOW DOWN THE FIRE.

CAUTION: SLOW BURNING FIRES AND EXTENDED USE MAY CAUSE EXCESSIVE CREOSOTE BUILDUP. IGNITION OF CREOSOTE OR OVER FIRING MAY CAUSE A CHIMNEY FIRE. CHIMNEY FIRES BURN EXTREMELY HOT AND MAY IGNITE SURROUNDING MATERIALS. IN CASE OF A CHIMNEY FIRE CALL THE FIRE DEPARTMENT IMMEDIATELY.

CREOSOTE – FORMATION AND NEED FOR REMOVAL

CAUTION: RISK OF FIRE When wood is burned slowly, it produces tar and other organic vapors, which combine with expelled moisture to form creosote. The creosote vapors condense in the relatively cool chimney flue of a slow-burning fire. As a result, creosote residue accumulates on the flue lining. When ignited this creosote makes an extremely hot fire.

The chimney connector and chimney should be inspected at least once every two months during the heating season to determine if a creosote buildup has occurred.

If creosote has accumulated (3mm or more) it should be removed to reduce the risk of a chimney fire.

Failure to remove creosote may result in ignition and may cause a house/building fire. Creosote may be removed using a chimney brush or other commonly available materials from your local hardware retailer.

Chimney fires burn very hot. If the unit or chimney connector should glow red, reduce the fire by closing the inlet air control and immediately call the fire department.

CAUTION: A CHIMNEY FIRE MAY CAUSE IGNITION OF WALL STUDS OR RAFTERS WHICH WERE ASSUMED TO BE A SAFE DISTANCE FROM THE CHIMNEY. IF A CHIMNEY FIRE HAS OCCURRED, HAVE YOUR CHIMNEY INSPECTED BY A QUALIFIED EXPERT BEFORE USING AGAIN.

A fire in the firebox may be smothered by pouring a large quantity of coarse salt, baking soda, or cool ashes on top of the fire.

PREVENTING CREOSOTE BUILDUP

1. Creosote will inevitably form in your chimney and connector pipe. Following these steps will help reduce the rate of build up.
2. **BURN ONLY SEASONED WOOD** that has dried for at least one year. (<20% humidity by weight)
3. Burn hardwood rather than softwood. Hardwood is denser or heavier wood and burns hotter.
4. Do not attempt to burn (or mix in) green or wet wood. The use of green or wet wood will cause a rapid build up of creosote. Wood that hisses, sizzles and blackens without igniting in five minutes must be considered too wet to burn.

continued on next page

5. Do not attempt to extend the burn time by using wet wood. Not only does burning wet wood rapidly build up creosote, but it reduces the heat output by up to 25 percent.
6. Burn the stove with the air inlet control wide open for 10-25 minutes every time fresh wood is loaded into the stove. Do not load more than ¼ to ½ of the fuel capacity at one time. Loading too much wood at once will cause excessive smoke which contains creosote. Mature fires or coals produce very little creosote-producing smoke.
7. Burn with the control open for several minutes at numerous intervals throughout the day, being careful not to over fire the unit. Following this process will help to warm the chimney and reduce the amount of creosote forming condensation within the chimney.
8. Establish a routine for the handling of fuel, firing, and operating the stove. Check daily for creosote build up until experience shows how often you need to clean for safe operation. Be aware that the hotter the fire, the less creosote is deposited and weekly cleanings may be necessary in mild weather even though monthly cleanings may be enough in the colder months.

WARNING: IN CASE OF CHIMNEY FIRE:
(1) CLOSE AIR INLET CONTROL(S)
(2) GET OUT OF THE HOUSE
(3) CALL THE FIRE DEPARTMENT.

CHIMNEY DRAFT

The chimney is critical to the proper operation of the stove. **It is the chimney that creates draft; THE STOVE DOES NOT AND CANNOT CREATE DRAFT.** The chimney provides two vital functions for proper stove operation. First, it is the passage to exhaust smoke and hot gases created in the combustion process. Secondly, it supplies the draft (or pressure) to bring oxygen to the fire to sustain combustion. Draft is the natural movement of air or gases through a chimney. Chimney draft comes from the natural tendency for hot (less dense) air to rise. As the hot air rises within the chimney it creates a lower pressure at the bottom of the chimney to which the stove is connected. The higher pressure air outside the stove then rushes into the stove where the lower air pressure level exists, thus bringing oxygen to the fire. This constant flow of air is referred to as the draft. Many factors or combination of factors can act together to build or impede the draft. Without the correct amount of draft, the stove will not operate properly.

If there is excessive draft, an unsafe condition will arise with too much air being drawn into the stove and creating an excessively hot fire. This could cause over firing which runs the risk of igniting structural elements around the stove and chimney.

The most common experience is that of insufficient draft. Under insufficient draft conditions, the fire will be starved for oxygen, improper or incomplete combustion occurs resulting in smoke spillage into the area around the stove. A fire that is starved for oxygen will not burn well. Such a fire will produce excessive smoke that will cool and condense in the chimney creating creosote. Excessive amounts of creosote buildup can ignite causing a chimney fire with the possibility of structural elements igniting as well.

Correct any draft related issues before using the stove. The following are some possible causes of insufficient draft. Please note that one or more factors may play a role in a draft issue and certain factors may change over time as conditions vary.

1. <u>Atmospheric Pressure and Air Supply</u>

   Atmospheric pressure that affects the draft may occur from outside the structure, inside the structure, or both. High pressure weather (clear and cold) usually produces a better chimney draft than low pressure (overcast and damp) conditions. Negative pressure can be created inside a home by appliances that expel air from within such as bathroom vents, range hoods, clothes dryers, and forced air furnaces. Do not allow such appliances to overcome the natural draft. Note that newer homes tend to be built more tightly allowing less make up air to seep freely in. Negative pressure may be overcome by opening a nearby door or window. In extreme conditions of negative draft, the airflow in the chimney will reverse direction. This is known as “down drafting.”
2. <u>Environmental Factors</u>

   Wind or air deflecting off external objects such as the roof, neighboring structures, trees, or hills. These can cause a pressure change in the air surrounding the chimney.
3. <u>Chimney Temperature</u>

   The temperature of the chimney is an important factor in how well it drafts. Warm chimneys draft better than cold chimneys. This is based upon the principle that hot air rises while cold air sinks. Hot gases going up a cold chimney will cool rapidly. Warm the chimney by allowing a hot fire to burn for the first fifteen to thirty minutes after starting the fire. Be careful not to over fire the stove. If any part of the stove or chimney starts to glow, you are over firing the stove. Masonry chimneys will take longer

to warm than manufactured chimneys on account of their greater structural mass. Chimneys that have a flue diameter larger than the stove outlet take more heat to warm, thus resulting in a faster cooling of the hot gases needed to build or maintain draft.

4. Chimney Installation and Maintenance

   Confirm that **all four minimum chimney height requirements** listed in the Chimney Connection section of the manual have been met. The physics that link chimney height with draft creation are vital to the proper operation of the stove. Failure to meet each of these minimum requirements will have an adverse affect on draft. Avoid long horizontal runs or multiple elbows. Use stove cement to seal joints in the connector pipe section. Regularly clean the chimney, connector pipe, rain cap, and spark arrestor screen. Creosote build up can reduce the chimney draw and possibly create a chimney fire.

5. Temporarily out of Operation

   After the fire has burned out, open the air control to its fully open position. This will allow warm room air to enter the chimney and keep it as warm as possible until the stove is used again.

For assistance involving chimney draft issues, contact a knowledgeable licensed heating and cooling contractor in your area. For questions regarding manufactured chimney, contact the manufacturer of the chimney.

NOTE: A DRAFT READING OF 0.05 TO 0.06 W.C. (WATER COLUMN) IS REQUIRED FOR PROPER BURNING OF THIS STOVE.

GLASS CARE

CAUTION: DO NOT OPERATE WITH CRACKED OR BROKEN GLASS.

Periodic cleaning of glass will be necessary to prevent accumulations of ash. Acidic ash buildup can eventually etch and weaken glass. Creosote accumulations should burn off during hot fires. The following usage and safety tips should be observed:

1. Inspect the glass regularly for cracks and breaks. If you detect a crack or break, extinguish the fire immediately and contact the manufacturer for a replacement before re-firing the stove.
2. Do not slam the door or otherwise impact the glass. When closing doors, make sure that logs or other objects do not protrude to impact the glass.
3. Do not build fires against (or that might fall against) the glass.
4. Do not clean the glass with materials that may scratch (or otherwise damage) the glass. Scratches on the glass can develop into cracks or breaks during operation.
5. Never attempt to clean the glass while the unit is hot; allow to dry thoroughly before reuse. If deposits are not very heavy, normal glass cleaners are adequate using a soft, non-abrasive cleaning pad.
6. Never put substances which can ignite explosively in the unit. Even small explosions in confined areas can blow out the glass.

GLASS REPLACEMENT

WARNING: REPLACE GLASS ONLY WITH 5MM HIGH TEMPERATURE CERAMIC GLASS OF THE PROPER SIZE. DO NOT USE SUBSTITUTE MATERIALS SUCH AS TEMPERED GLASS OR DOUBLE THICKNESS WINDOW GLASS! CONTACT THE STOVE MANUFACTURER FOR REPLACEMENT GLASS.

Gasket and Glass cleaning products are available at local retail home centers. Manufacturers of cleaning products include, A.W. Perkins Co. (www.awperkins.com) or Rutland Products (www.rutland.com).

After extensive use, the gasket material which provides glass and door seal may lose it's resiliency and will need to be replaced. Inspect glass and door gaskets periodically to ensure proper seal; if gaskets become frayed or worn, replace immediately.

Glass Replacement Procedure:

1. Ensure appliance is not in operation and is thoroughly cooled.
2. Remove screw and glass clips. (See parts list and diagram.)
3. Remove glass from door frame.
4. If glass is broken, carefully remove and discard each broken piece to avoid cuts. Discard window gasket. Replace window and gasket with original factory replacement parts.
5. Replace new gasket starting at the bottom of glass working along edges, being sure to center gasket channel on glass.
6. Trim to length and butt ends together.
7. Perform replacement procedure in reverse order after replacing glass and gasket.
8. When replacing glass into door, be sure not to overtighten screws and clips.

DOOR GASKET REPLACEMENT

CAUTION: DO NOT OPERATE A STOVE THAT IS MISSING DOOR GASKET MATERIAL. OVER FIRING AND UNSAFE OPERATING CONDITIONS MAY RESULT.

PROCEDURE:

1. Ensure appliance is not in operation and is thoroughly cooled.
2. Remove old door gasket and clean channel.
3. Using an approved, high temperature gasket cement, apply a thin coat in bottom of channel.
4. Starting at hinge side of door, work gasket into channel around door unit, end butt and trim to length.
5. Close door and allow three to four hours for cement to set before firing appliance.

BLOWER MAINTENANCE

The optional blower is maintenance free other than cleaning. Lightly vacuum motor and air inlet to keep free of dust and dirt.

WIRING DIAGRAM - MODEL F-6 BLOWER OPTION

DANGER: SHOCK HAZARD. DISCONNECT POWER SOURCE BEFORE INSTALLATION AND WHENEVER SERVICING BLOWER ASSEMBLY.

CAUTION: MOVING PARTS CAN CAUSE INJURY. DO NOT OPERATE WITH COVER REMOVED.

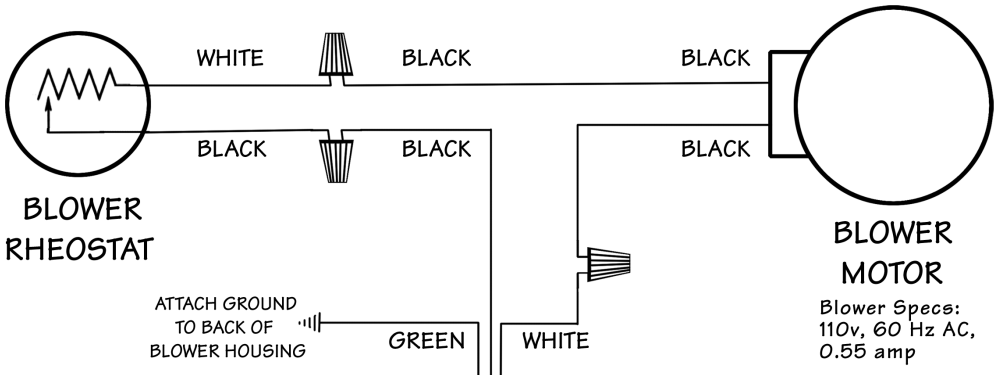

NOTICE: DO NOT ALLOW POWER CORD TO TOUCH HOT SURFACES! KEEP POWER CORD AT LEAST 12″/30.5CM FROM STOVE OR PIPE SURFACES.

POWER SUPPLY

NOTICE: ANY REPLACEMENT WIRING MUST HAVE EQUIVALENT INSULATION AND TEMPERATURE RATING (105°C).

ORDERING PARTS - TROO2B SHILOH™ STOVE

When ordering missing or replacement parts, always give the **Model Number** of the stove, **Part Number**, and **Part Description**. Use the illustrations and part lists provided to identify parts. Contact us at **616-396-1911** to order parts.

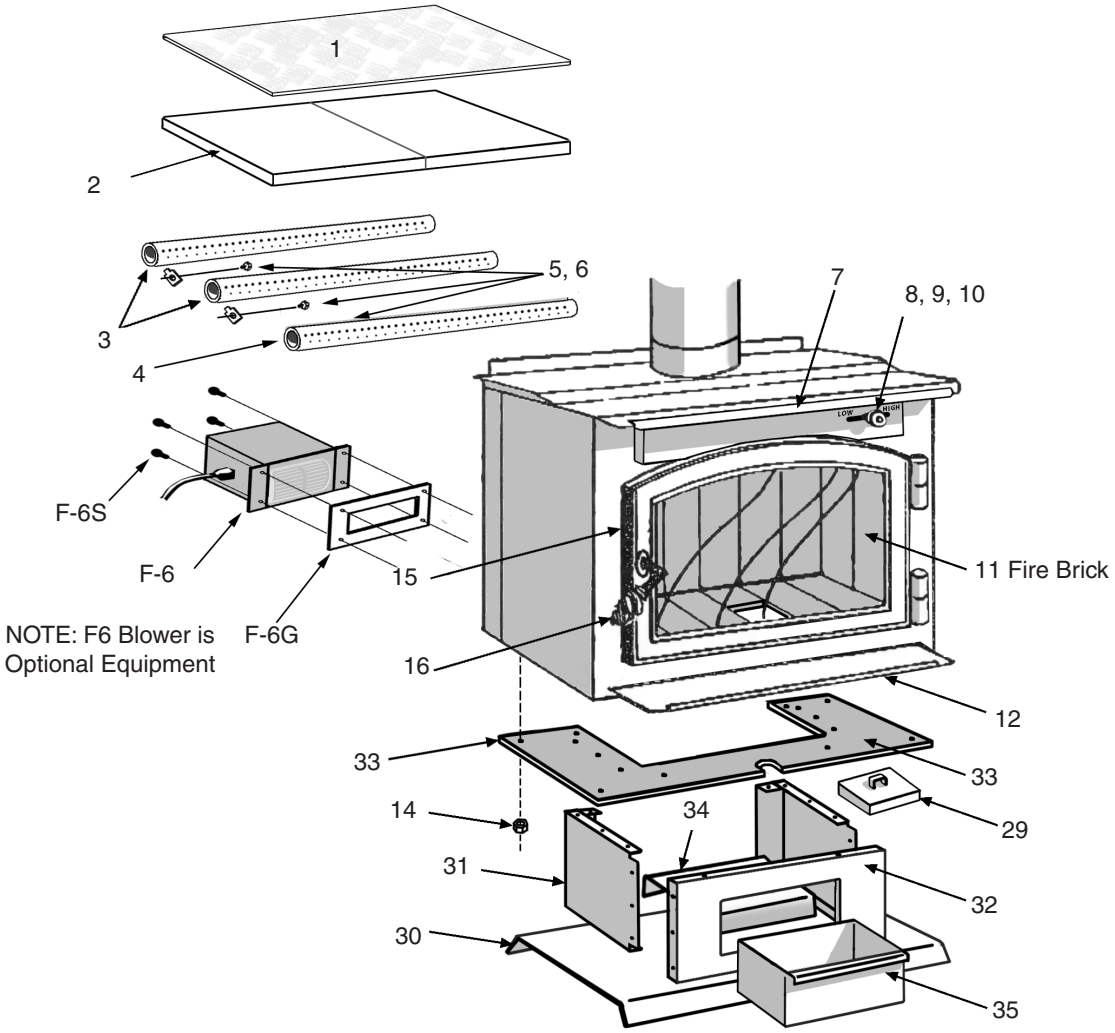

Part No.	Description	Qty.
2B-01	Ceramic Fiber Pad	1
2B-02	C-Cast Fiber Board (9.3″ x 11″ x 0.5″)	2
2B-03	Air Tube, Middle & Rear	1
2B-04	Air Tube, Front	1
2B-05	Retainer Clips, Air Tube	3
2B-06	Bolt, Retainer Clip	3
2B-07	Nickle Trim, Top Plate	1
2B-08	Handle, Slide Draft Spring	1
2B-09	Slide Draft	1
2B-10	Cover, Slide Draft	1
2B-11	Fire Brick: See Chart on next page	
2B-12	Nickle Trim, Hearth	1
2B-13		
2B-14	Nuts (9/16″ pedestal/stove attachment)	4
2B-15	**Door Assembly (complete)**	1
2B-16	Handle Assembly (complete)	1
2B-17	Hinge Pin	1
2B-18	Door Frame	1
2B-19	Door Glass	1
2B-20	WG01Glass Gasket, 3/8″ Fiberglass	1

Part No.	Description	Qty.
2B-21	Retainer, Glass	5
2B-22	Retainer, Handle Side Glass	1
2B-23	Screws, Glass Retainer	8
2B-24	GK34 Door Gasket, 3/8″ Fiberglass	1
2B-29	Ash Cleanout Cover	1
2B-30	Pedestal Base	1
2B-31	Pedestal Side	2
2B-32	Pedestal Front	1
2B-33	Pedestal Top	1
2B-34	Pedestal Drawer Support	1
2B-35	Ash Drawer	1
2B-HP	Hardware Pack (not shown)	1

Blower Option (NOT included as standard equipment)

F-6	Optional Blower Assembly	1
F-6G	Gasket, Ceramic Blower	1
F-6S	Screws, Blower Mounting	4

PARTS - TR001B DEFENDER HIGH-EFFICIENCY STOVE

When ordering missing or replacement parts, always give the **Model Number** of the stove, **Part Number**, and **Part Description**. Use the illustrations and part lists provided to identify parts. Contact us at **616-396-1911** to order parts.

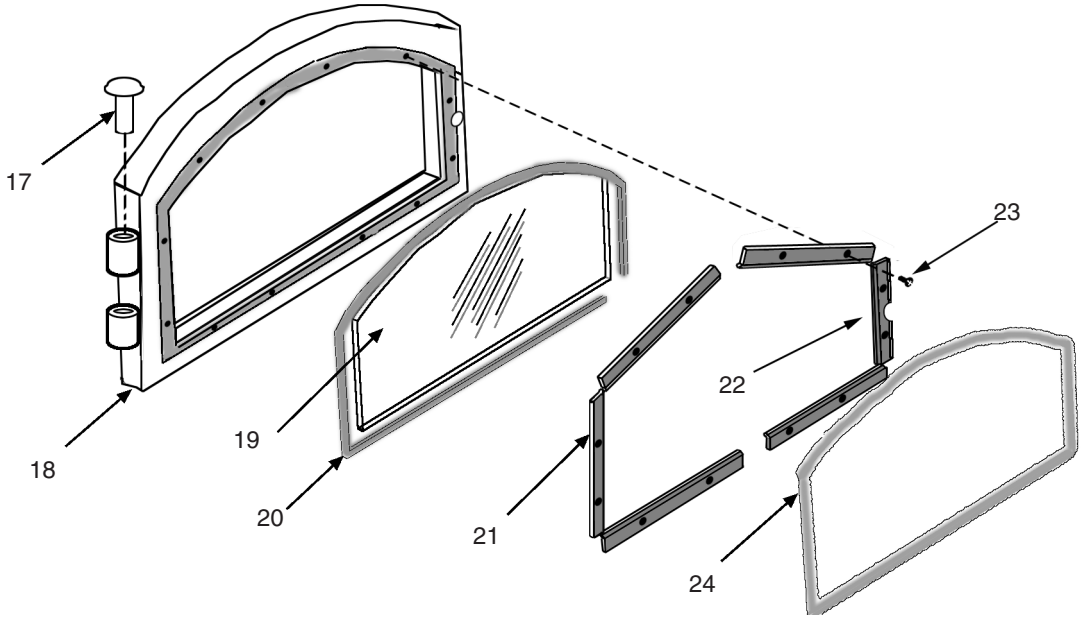

Part No.	Description	Qty.
2B-15	**Door Assembly (complete)**	**1**
2B-16	Handle Assembly (complete)	1
2B-17	Hinge Pin	2
2B-18	Door Frame	1
2B-19	Door Glass	1
2B-20	Gasket, 3/8˝ Fiberglass Glass	1
2B-21	Retainer, Glass	5
2B-22	Retainer, Handle Side Glass	1
2B-23	Screws, Glass Retainer	12
2B-24	Gasket, Door	1

Part No.	Description	Qty.
2B-**11**	**Fire Brick Layout**	
2B-11A	Fire Brick A-size	8
2B-11FF	Fire Brick FF-size	2
2B-11M	Fire Brick M-size	2
2B-11T	Fire Brick T-size	2
2B-11X	Fire Brick X-size	1
2B-11Y	Fire Brick Y-size	1
2B-11Z	Fire Brick Z-size	2

Fire Brick: Sides

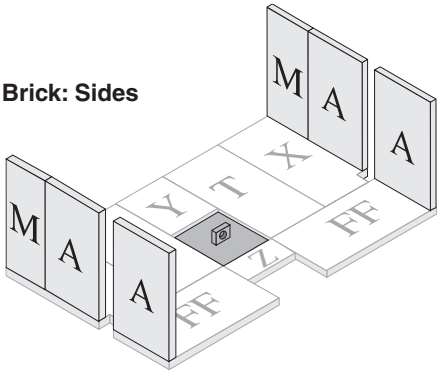

Fire Brick: Back

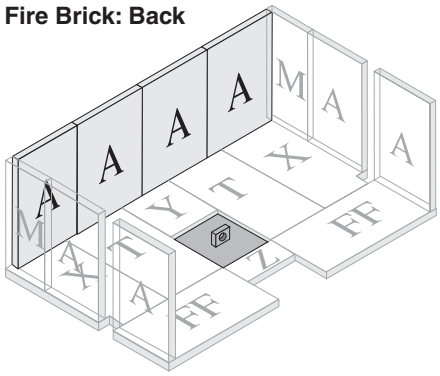

Fire Brick: Bottom

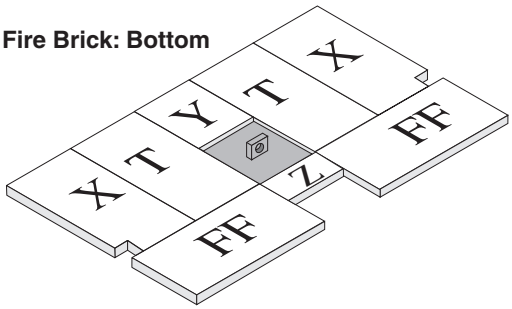

FLOOR PROTECTOR MATERIAL CALCULATIONS

This stove has been tested for and must be installed on a floor protector with the proper Thermal Resistance or R-value as stated in the installation instructions on page 6, “Locating Stove” step 1, of this manual. If the floor protector materials listed in the instructions are not available, materials with an equivalent R-value may be substituted.

Alternate materials may be rated with C-factor (Thermal Conductance) or k-factor (Thermal Conductivity) ratings which must be converted to R-value to determine if the alternate material meets the tested requirements. The following instructions provide the proper information and formulas for conversion to R-value.

To determine if alternate materials are acceptable follow this sequence.

1. Convert material specifications to R-value:
   a. R-value given — no conversion necessary
   b. k-factor is given with a required thickness (T) in inches:
      R = 1/k x T
   c. C-factor is given: R = 1/C
2. Determine the R-value of proposed alternate floor protector:
   a. Use formulas in step 1 above to calculate R-value of proposed material(s).
   b. For multiple layers, add R-values of each layer to determine overall R-value.
3. If the overall R-value of the floor protector system is equal to or greater than the floor protector specifications given, the alternate is acceptable.

Definitions:

Thermal conductance (C) = $\frac{\text{BTU}}{(\text{hr})(\text{ft}^2)(°\text{F})} = \frac{\text{W}}{(\text{m}^2)(°\text{K})}$

Thermal conductivity (k) = $\frac{(\text{Btu})(\text{inch})}{(\text{hr})(\text{ft}^2)(°\text{F})} = \frac{\text{W}}{(\text{m})(°\text{K})} = \frac{\text{Btu}}{(\text{hr})(\text{ft})(°\text{F})}$

Thermal resistance (R) = $\frac{(\text{ft}^2)(\text{hr})(°\text{F})}{\text{Btu}} = \frac{(\text{m}^2)(°\text{K})}{\text{W}}$

Example:

The specs of floor protector material should be 3/4-inch thick material with a k-factor of 0.84.
The proposed alternative material is 4˝ brick with a C-factor of 1.25 over 1/8-inch mineral board with a k-factor of 0.29.

Step 1: Convert specs to R-value.
R = 1/k x T = 1/0.84 x 0.75 = 0.893 System must have a R-value of 0.893 = Rspecs

Step 2: Calculate R-value of individual components
4˝ Brick with C-factor = 1.25. R = 1/C = 1/1.25 = 0.80 = Rbrick
1/8-inch (0.125˝) mineral board with k-factor = 0.29. R = 1/0.29 x 0.125 = 0.431 = Rmin.brd.

Step 3: Add R-values of components to get total R-value of system
Rbrick + Rmin.brd = 0.80 + 0.431 = 1.231 = Rsystem

Step 4: Compare Rsystem to Rspecs
Rsystem = 1.231 is larger than Rspecs of 0.893. System R-value exceeds the required specifications and therefore is an acceptable alternative.

CHIMNEY & STOVE MAINTENANCE LOG

DATE OF SERVICE	PERFORMED BY	DESCRIPTION

This Vogelzang heating appliance is safe when installed properly and will provide you with years of service. However, always exercise good judgement when you are using this stove. You are dealing with FIRE! Fire is inherently dangerous and must be treated with respect. Stay warm and in good health!

Respectfully yours,

Steve Vogelzang

Proprietor

DO <u>NOT</u> USE THIS STOVE IN A MOBILE HOME, MANUFACTURED HOME, TRAILER OR TENT — *<u>NO EXCEPTIONS!</u>*

COMPANY TESTIMONY:

"FOR GOD SO LOVED THE WORLD THAT HE GAVE HIS ONLY BEGOTTEN SON, THAT WHOEVER BELIEVES IN HIM SHALL NOT PERISH BUT HAVE ETERNAL LIFE"

JOHN 3:16

MADE IN CHINA

VOGELZANG

International CORPORATION

Vogelzang International Corporation
400 West 17th Street
Holland, Michigan 49423
www.vogelzang.com
Phone: 1-616-396-1911
Fax: 1-616-396-1971